ELITE DOORS AND WINDOWS INC.
SERIES YY 150 ALUMINUM FIXED WINDOW- NI

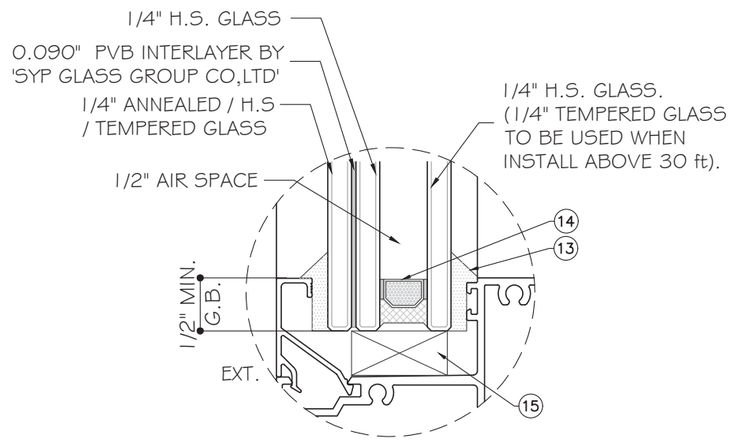

GLASS TYPE "G1"
1 5/16" INSULATED LAMINATED GLASS
MAX. GLASS SIZE APPROVED:
D.L.O. WIDTH x D.L.O. HEIGHT ≤ 32.7 FT²

NOTE:
GLASS COMPLIES WITH ASTM E1300-09 (3 SEC. GUSTS).

GENERAL NOTES:

FIXED WINDOW SYSTEM IS NON IMPACT SYSTEM TO BE USED OUTSIDE OF HVHZ. (NON HVHZ) THIS SYSTEM MAY BE USED IN CONJUNCTION WITH FLORIDA STATE APPROVED ENTRANCE DOORS.

- CODE REQUIREMENTS FOR SAFEGUARDS MUST BE OBSERVED.
- THIS PRODUCT HAS BEEN DESIGNED AND TESTED TO COMPLY WITH THE REQUIREMENTS OF THE FLORIDA BUILDING CODE 8TH EDITION (2023) NOT INCLUDING HIGH VELOCITY HURRICANE ZONE (NON-HVHZ).
- ULTIMATE LOAD OBTAINED FROM ASCE 7-22, MULTIPLY BY 0.6 SHALL BE LESS THAN OR EQUAL TO MAX. DESIGN LOAD IN THIS DOCUMENT. THE DESIGN LOADS SHOWN IN THIS DOCUMENT ARE ALLOWABLE DESIGN LOADS.
- WOOD BUCKS BY OTHERS, MUST BE ANCHORED PROPERLY TO TRANSFER LOADS TO THE STRUCTURE.
- ANCHORS SHALL BE AS LISTED, SPACED AS SHOWN ON DETAILS, ANCHORS EMBEDMENT TO BASE MATERIAL SHALL BE BEYOND WALL DRESSING OR STUCCO.
- ANCHORING OR LOADING CONDITIONS NOT SHOWN IN THESE DETAILS ARE NOT PART OF THIS APPROVAL.
- A LOAD DURATION INCREASE IS USED IN DESIGN OF ANCHORS INTO WOOD ONLY.
- MATERIALS INCLUDING BUT NOT LIMITED TO STEEL / METAL SCREWS, THAT COME INTO CONTACT WITH OTHER DISSIMILAR MATERIALS SHALL MEET THE REQUIREMENTS OF THE FLORIDA BUILDING CODE 8TH EDITION (2023) SECTION AS APPLICABLE.
- MANUFACTURER'S LABEL SHALL BE LOCATED ON A READILY VISIBLE LOCATION IN ACCORDANCE WITH SECTION 1709.9.3 OF FLORIDA BUILDING CODE LABELING TO COMPLY WITH SECTION 1709.9.2.

USE CHARTS AS FOLLOWS.

STEP 1: DETERMINE DESIGN WIND LOAD REQUIREMENTS BASED ON WIND VELOCITY, BUILDING HEIGHT, WIND ZONE USING APPLICABLE ASCE 7-22 STANDARD.

STEP 2: SEE SHEET 1 FOR GLASS OPTIONS AND MAX. D.L.O. AREA ALLOWED.

STEP 3: SEE TYPICAL ELEVATION ON SHEET 2. CHECK MULLION CAPACITY FOR A GIVEN SPACING AND HEIGHT USING CHART 1. THE CAPACITY SHOULD EXCEED THE DESIGN LOAD REQUIRED FOR JOB.

STEP 4: SEE ANCHOR OPTIONS ON SHEET D2. NUMBER OF ANCHOR REQUIRED AND SEE SHEET 1.

LIMITATIONS OF USE

A- THIS PRODUCT EVALUATION DOCUMENT (P.E.D.) PREPARED BY THIS ENGINEER IS GENERIC AND DOES NOT PROVIDE INFORMATION FOR A SITE SPECIFIC PROJECT; i.e. WHERE THE SITE CONDITIONS DEVIATE FROM THE P.E.D.

B- CONTRACTOR TO BE RESPONSIBLE FOR THE SELECTION, PURCHASE AND INSTALLATION OF THIS PRODUCT BASED ON THIS PRODUCT EVALUATION PROVIDED HE/SHE DOES NOT DEVIATE FROM THE CONDITIONS DETAILED ON THIS DOCUMENT.

C- THIS PRODUCT EVALUATION DOCUMENT WILL BE CONSIDERED INVALID IF ALTERED BY ANY MEANS.

D- SITE SPECIFIC PROJECTS SHALL BE PREPARED BY A FLORIDA REGISTERED ENGINEER OR ARCHITECT WHICH WILL BECOME THE ENGINEER OF RECORD (E.O.R.) FOR THE PROJECT AND WHO WILL BE RESPONSIBLE FOR THE PROPER USE OF THE P.E.D.

E- THIS P.E.D. SHALL BEAR THE DATE AND ORIGINAL SEAL AND SIGNATURE OF THE PROFESSIONAL ENGINEER OF RECORD THAT PREPARED IT.

FLORIDA APPROVAL:
FL47433

ABBREVIATIONS AND SYMBOLS

D.L.O. - DAYLITE OPENING
F.H. - FRAME HEIGHT
F.W. - FRAME WIDTH
W/ - WITH
W/O - WITHOUT
O.C. - ON CENTER
G.B. - GLASS BITE

C / 7
SECTION NUMBER
SHEET NUMBER

YIPING WANG
FLORIDA REGISTRATION
CL #55983
C.A.N. 68077
LICENSE No 55983 STATE OF FLORIDA PROFESSIONAL ENGINEER
April 11th, 2025

MCY ENGINEERING, INC.
GLAZING CONSULTANTS
12781 MIRAMAR PKWY. STE. 301
MIRAMAR, FL 33027
P: 305.271.0117
www.MCYEngineering.com mcy@mcyengineering.com

YY150 ALUMINUM FIXED WINDOW SYSTEM- NON IMPACT

ELITE DOORS AND WINDOWS, INC.
4780 CORONA AVENUE, VERNON, CALIFORNIA 90058
TEL.310 487 3334
EMAIL: Gino@elitedoorswindows.com

Rev. No.	Date	Drawn By	Description
R0	04.07.2025	James	NEW APPLICATION

Drawn Date 04.07.2025
SCALE AS SHOWN
DRAWING NO. AD25-13
COVER
Sheet No. 01 OF 06

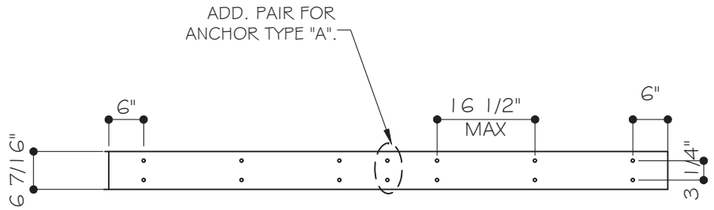

ANCHOR LAYOUT AT HEAD

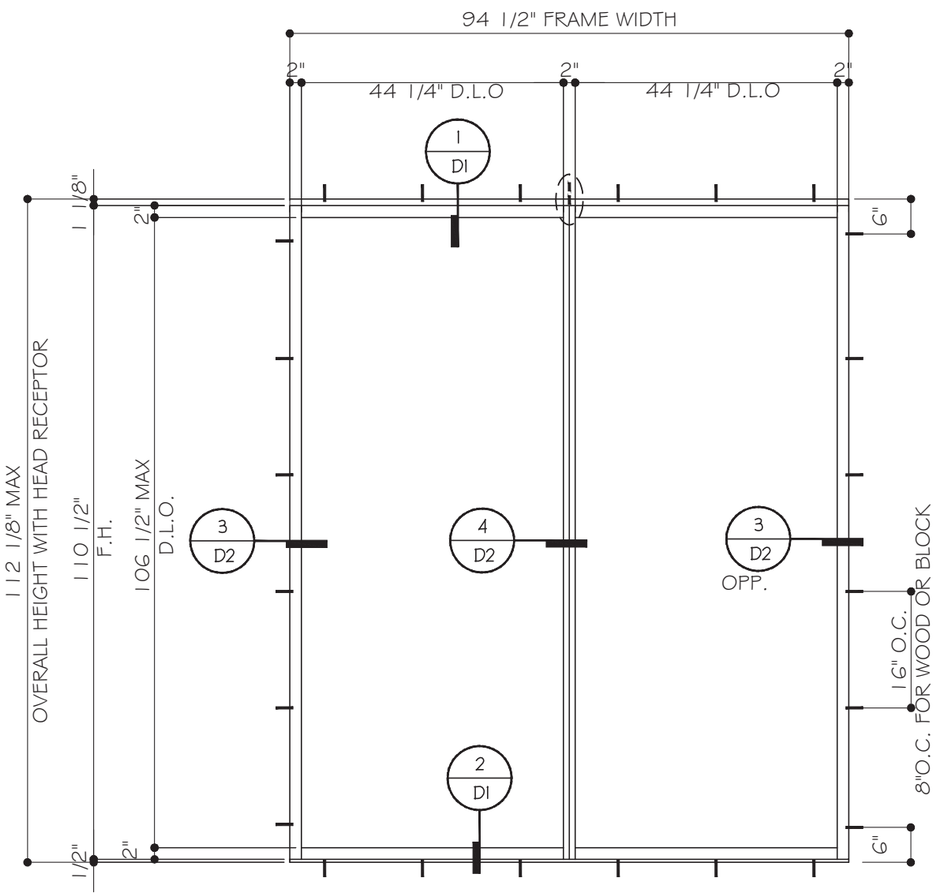

TYPICAL EXTERIOR ELEVATIONS
SEE CHART 1
FOR APPROVED SIZE AND CAPACITIES

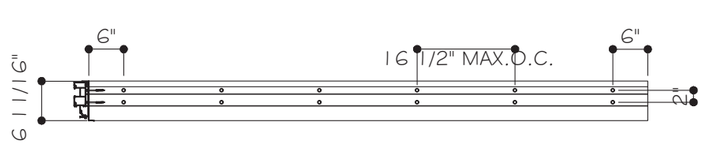

ANCHOR LAYOUT AT SILL

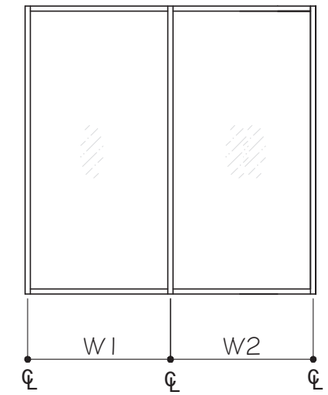

TYPICAL ELEVATION

$$\text{MULLION WIDTH (W)} = \frac{W1 + W2}{2}$$

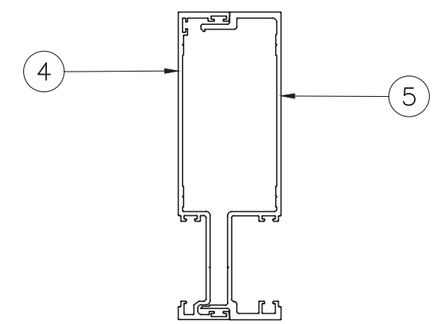

MULLION "M1"

	Ix IN^4	Sx IN^3
YY150-20	3.1196	1.0513
YY150-21	4.1212	1.3895
TOTAL	7.24	2.44

CHART 1 - FIXED WINDOW MULLION CAPACITY

NOMINAL DIMENSIONS		M1
FRAME WIDTH	FRAME HEIGHT	EXT(+) INT (-)
W (IN)	H (IN)	PSF
30	90	70
36		70
42		70
48		70
54		65
30	96	70
36		70
42		69
48		61
30	102	70
36		69
42		60
48		54
30	108	70
36		61
42		53
30	110	70
36		59
42		51
46.25		47
30	114	65
36		55
42		48
30	120	59
36		49
42		43
30	126	53
36		45
30	128	48
36		41

FLORIDA APPROVAL:
FL47433

YIPING WANG P.E.
FLORIDA REGISTRATION
LIC. #55983
C.A.N. 6877
STATE OF FLORIDA PROFESSIONAL ENGINEER LICENSE No 55983
April 11th, 2025

MCY ENGINEERING, INC.
GLAZING CONSULTANTS
12781 MIRAMAR PKWY. STE.301
MIRAMAR, FL 33027
P: 305.271.0117
www.MCYEngineering.com mcy@mcyengineering.com

YY150 ALUMINUM FIXED WINDOW SYSTEM- NON IMPACT

ELITE DOORS AND WINDOWS, INC.
4780 CORONA AVENUE, VERNON, CALIFORNIA 90058
TEL.310 487 3334
EMAIL: Gino@elitedoorswindows.com

Rev. No.	Date	Drawn By	Description
R0	04.07.2025	James	NEW APPLICATION

Drawn Date 04.07.2025
SCALE AS SHOWN
DRAWING NO. AD25-13
E1
Sheet No. 02 OF 06

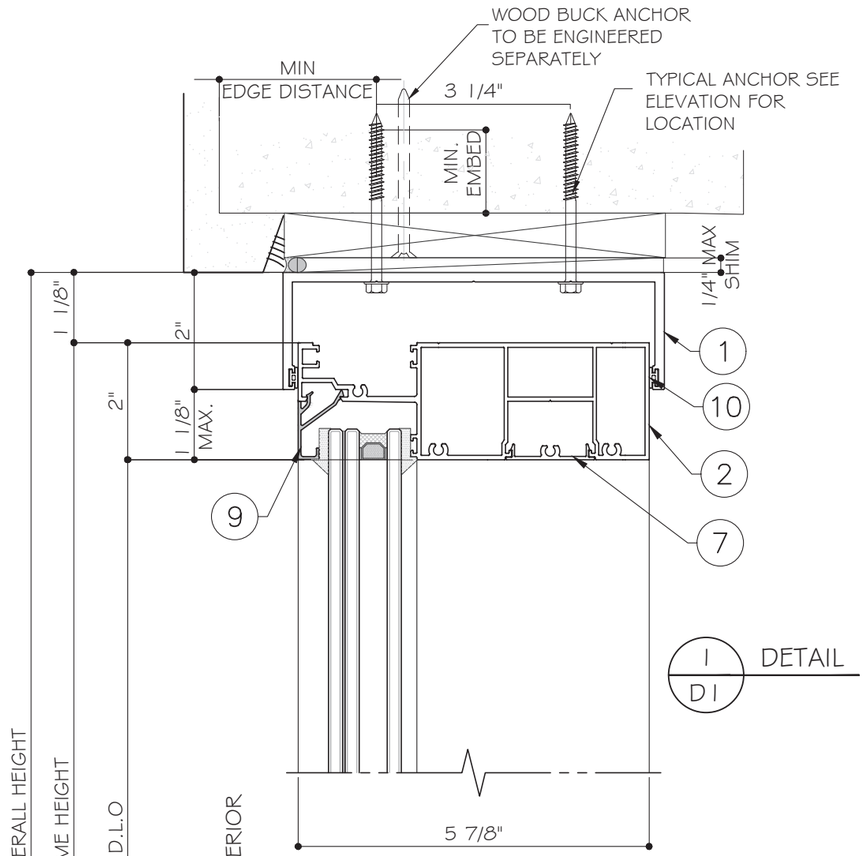

1 / D1 DETAIL

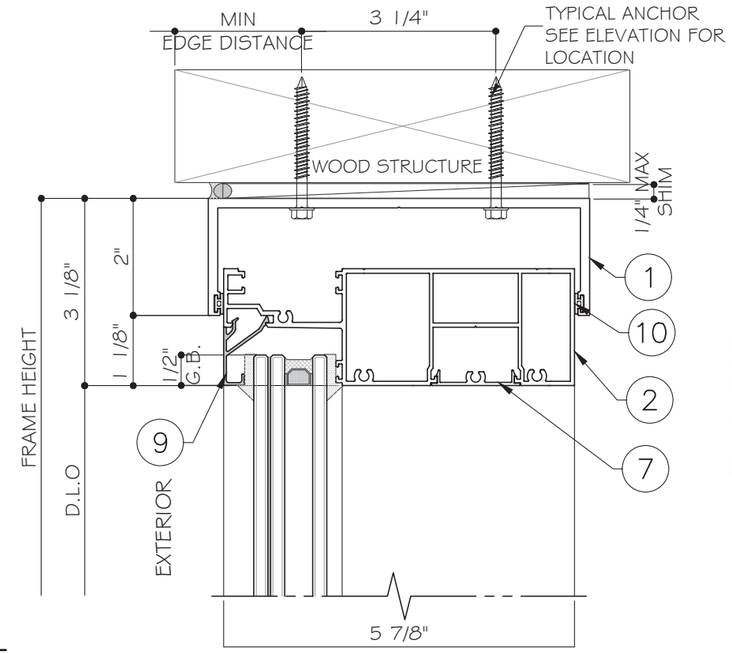

1 / D1 OPTION

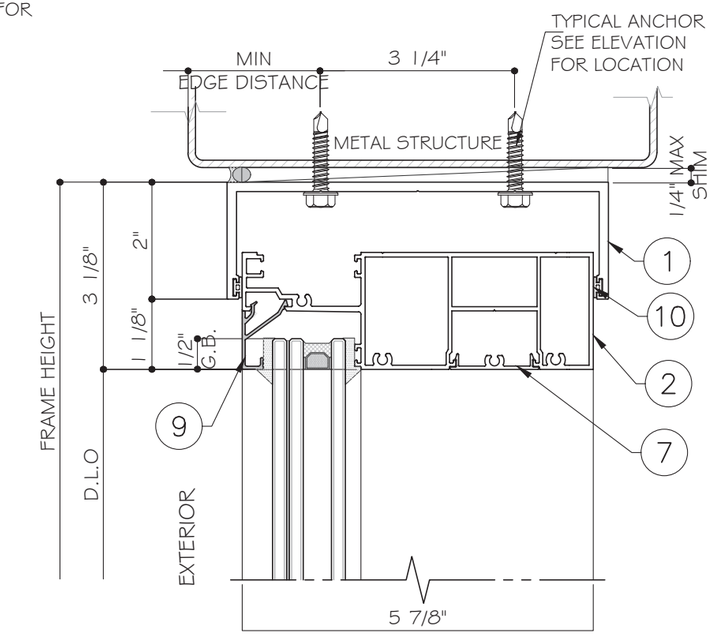

1 / D1 OPTION

WOOD BUCKS AND METAL STRUCTURE BY OTHERS MUST BE ANCHORED PROPERLY TO SUSTAIN LOADS IMPOSED BY GLAZING SYSTEM AND TRANSFER THEM TO THE BUILDING STRUCTURE.

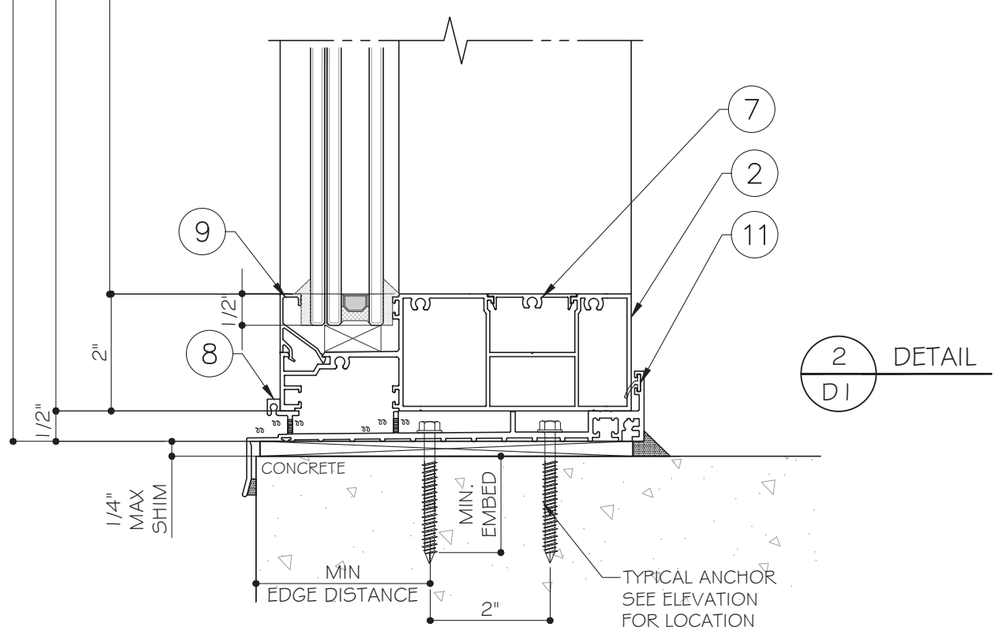

2 / D1 DETAIL

FLORIDA APPROVAL:

FL47433

YING WANG
FLORIDA REGISTRATION
P.E. #55983
C.A.N. 8877

STATE OF FLORIDA
YING WANG
LICENSE
No 55983
PROFESSIONAL ENGINEER

April 11th, 2025

MCY ENGINEERING, INC.
GLAZING CONSULTANTS
12781 MIRAMAR PKWY. STE. 301
MIRAMAR, FL 33027
P: 305.271.0117
www.MCYEngineering.com mcy@mcyengineering.com

YY150 ALUMINUM FIXED WINDOW SYSTEM- NON IMPACT

ELITE DOORS AND WINDOWS, INC.
4780 CORONA AVENUE, VERNON, CALIFORNIA 90058
TEL.310 487 3334
EMAIL: Gino@elitedoorswindows.com

Rev. No.	Date	Drawn By	Description
R0	04.07.2025	James	NEW APPLICATION

Drawn Date 04.07.2025

SCALE AS SHOWN

DRAWING NO. AD25-13

D1

Sheet No. 03 OF 06

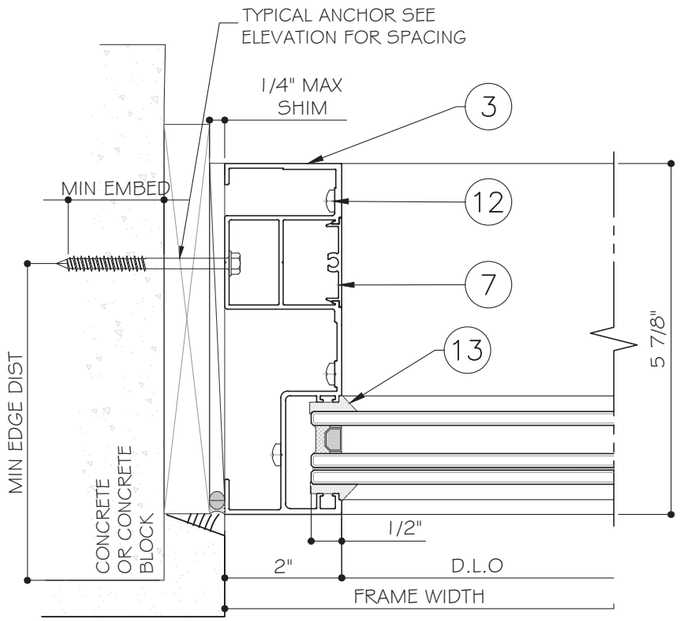

3 / D2 DETAIL

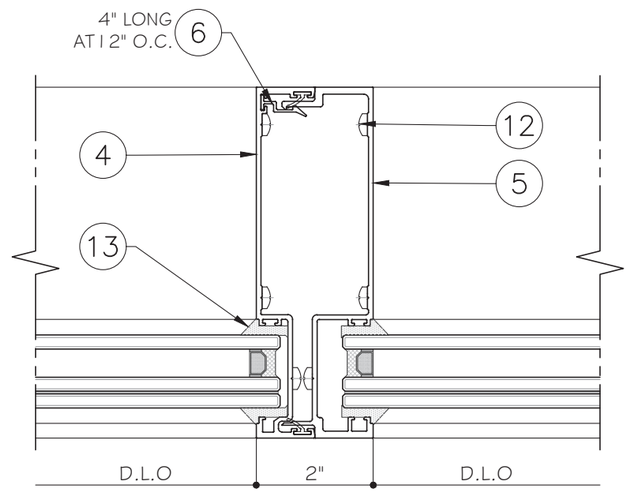

4 / D2 DETAIL

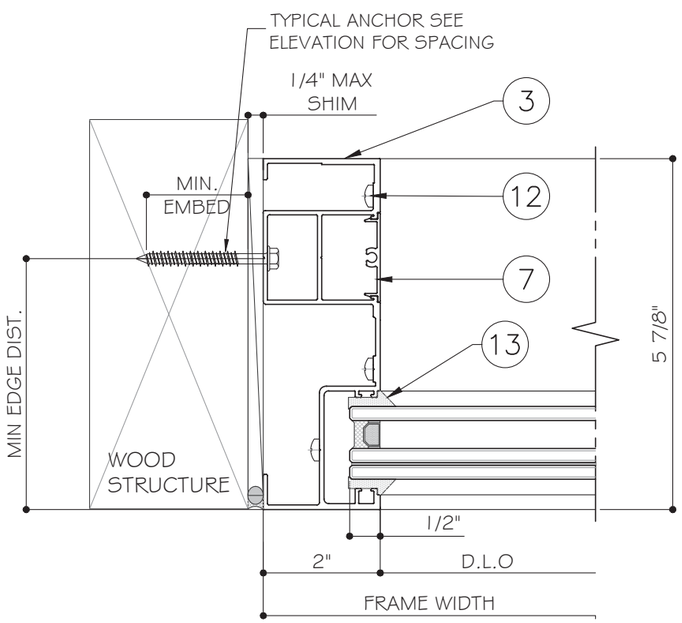

3 / D2 OPTION

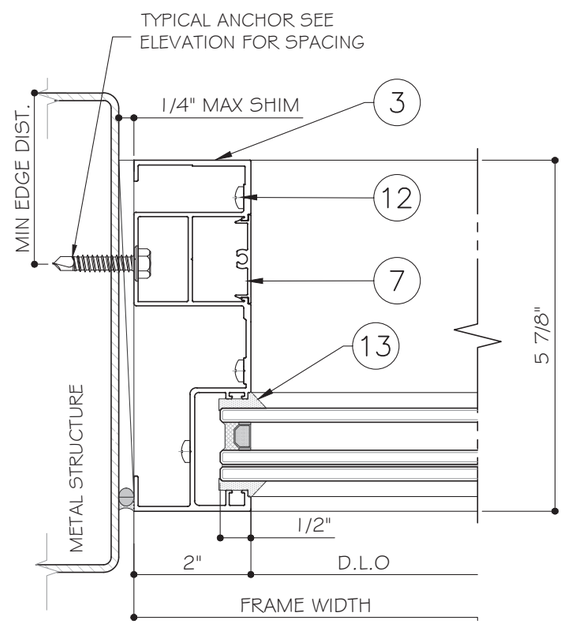

3 / D2 OPTION

TYPICAL ANCHORS :
(SEE ELEVATIONS FOR SPACING)

TYPE A: 3/8" SCREW- BOLT+ BY 'DeWalt (Fu=105 KSI, Fy=84 KSI)
INTO 2BY WOOD BUCKS OR WOOD STRUCTURES WITH
WITH 1-1/2" MIN. PENETRATION
OR THRU WOOD INTO CONCRETE OR MASONRY
WITH 1 1/2" INTO CONCRETE OR
WITH 3 1/4" INTO BLOCK (JAMB ONLY)

TYPE B: 3/8" SCREW- BOLT+ BY 'DeWalt (Fu=105 KSI, Fy=84 KSI)
DIRECTLY INTO CONCRETE
WITH 1-1/2" MIN. EMBED

DIRECTLY INTO GROUT FILLED BLOCK (JAMB ONLY)
WITH 3 1/4" MIN. EMBEDMENT

TYPE C: 3/8" DIA. ELCO TAP FLEX INTO METAL STRUCTURES
STEEL: 1/8" THK. MIN. (A36 MIN.)
ALUMINUM: 3/16" THK. MIN. (6063-T5 MIN.)
(STEEL IN CONTACT WITH ALUMINUM TO BE PLATED OR PAINTED)

TYPICAL EDGE DISTANCE
INTO CONCRETE = 2-1/2" MIN.
INTO GROUT FILLED BLOCK = 3" MIN.
INTO WOOD STRUCTURE = 1-1/2" MIN.
INTO METAL STRUCTURE = 1" MIN.

WOOD AT HEAD OR JAMB SG=0.55 MIN.
CONCRETE AT HEAD, SILL & JAMB fc'=3000 PSI MIN.
C-90 HOLLOW/FILLED BLOCK OR MEDIUM WEIGHT CMU
fc'=1500 PSI MIN. (AT JAMB ONLY)

WOOD BUCKS AND METAL STRUCTURE BY OTHERS MUST BE ANCHORED PROPERLY TO SUSTAIN LOADS IMPOSED BY GLAZING SYSTEM AND TRANSFER THEM TO THE BUILDING STRUCTURE.

SEALANTS:

ALL FRAME AND PANEL JOINT, INSTALLATION SCREWS AND HEADS OF ANCHOR SCREWS TO BE SEALED WITH SILICONE BUILDING SEALANT.

FLORIDA APPROVAL:
FL47433

YIPING WANG, P.E.
FLORIDA REGISTRATION
LIC. NO. 55983
C.A.N. 0000077
STATE OF FLORIDA PROFESSIONAL ENGINEER
April 11th, 2025

MCY ENGINEERING, INC.
GLAZING CONSULTANTS
12781 MIRAMAR PKWY. STE. 301
MIRAMAR, FL 33027
P: 305.271.0117
www.MCYEngineering.com mcy@mcyengineering.com

YY150 ALUMINUM FIXED WINDOW SYSTEM- NON IMPACT

ELITE DOORS AND WINDOWS, INC.
4780 CORONA AVENUE, VERNON, CALIFORNIA 90058
TEL.310 487 3334
EMAIL: Gino@elitedoorswindows.com

Rev. No.	Date	Drawn By	Description
R0	04.07.2025	James	NEW APPLICATION

Drawn Date 04.07.2025
SCALE AS SHOWN
DRAWING NO. AD25-13
D2
Sheet No. 04 OF 06

BILL OF MATERIALS

ITEM	PART	DESCRIPTION	MATERIAL	REMARKS
1	YY150-33	SUBHEAD	ALUM. 6063-T5	-
2	YY150-23	TRANSOM	ALUM. 6063-T5	-
3	YY150-22	JAMB	ALUM. 6063-T5	-
4	YY150-20	FEMALE MULLION	ALUM. 6063-T5	-
5	YY150-21	MALE MULLIOM	ALUM. 6063-T5	-
6	YY100-15	CLIP	ALUM. 6063-T5	-
7	YY86-21	CAP	ALUM. 6063-T5	-
8	YY150-50	SUBSILL	ALUM. 6063-T5	-
9	YY100-7	BEAD	ALUM. 6063-T5	-
10	-	EPDM GASKET	EPDM	-
11	-	EPDM GASKET	EPDM	-
12	-	#10 S.S SELF-TAPPING SCREW	304	-
13	-	STRUCTURAL SILICONE	DOWSIL 268	DOW CORNING
14	-	ALUMINUM SPACER	ALUMINUM	-
15	-	SETTING BLOCK	TPE	SHORE HARDNESS 65-80

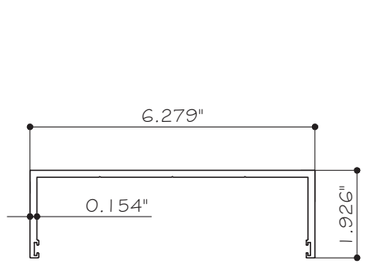

1 ALUM. SUBHEAD YY150-33
6063-T5

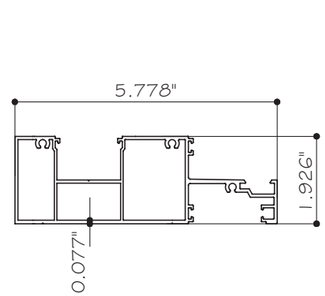

2 ALUM. TRANSOM YY150-23
6063-T5

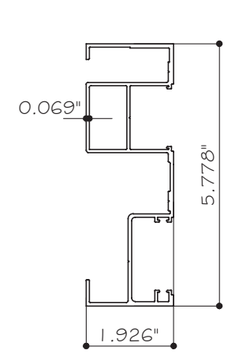

3 ALUM. JAMB YY150-22
6063-T5

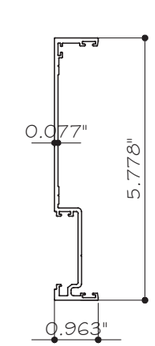

4 ALUM. FEMALE MULLION YY150-20
6063-T5

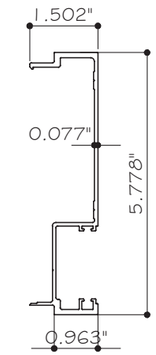

5 ALUM. MALE MULLION YY150-21
6063-T5

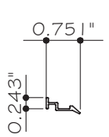

6 ALUM. CLIP YY100-15
6063-T5

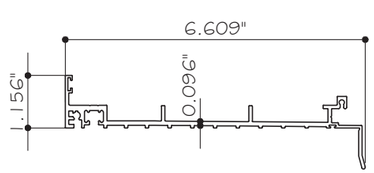

7 ALUM. SUBSILL YY150-50
6063-T5

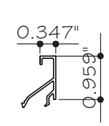

8 ALUM. BEAD YY100-7
6063-T5

FLORIDA APPROVAL:
FL47433

YONG WANG
FLORIDA REGISTRATION
P.E. #55983
C.A.N. 0000977

YONG WANG LICENSE No 55983 STATE OF FLORIDA PROFESSIONAL ENGINEER

April 11th, 2025

MCY ENGINEERING, INC.
GLAZING CONSULTANTS
12781 MIRAMAR PKWY.STE.301
MIRAMAR, FL 33027
P: 305.271.0117
www.MCYEngineering.com mcy@mcyengineering.com

YY150 ALUMINUM FIXED WINDOW SYSTEM- NON IMPACT

ELITE DOORS AND WINDOWS, INC.
4780 CORONA AVENUE, VERNON, CALIFORNIA 90058
TEL.310 487 3334
EMAIL: Ginc@elitedoorswindows.com

Rev. No.	Date	Drawn By	Description
R0	04.07.2025	James	NEW APPLICATION

Drawn Date 04.07.2025
SCALE AS SHOWN

DRAWING NO.
AD25-13

BOM

Sheet No.
05 OF 06

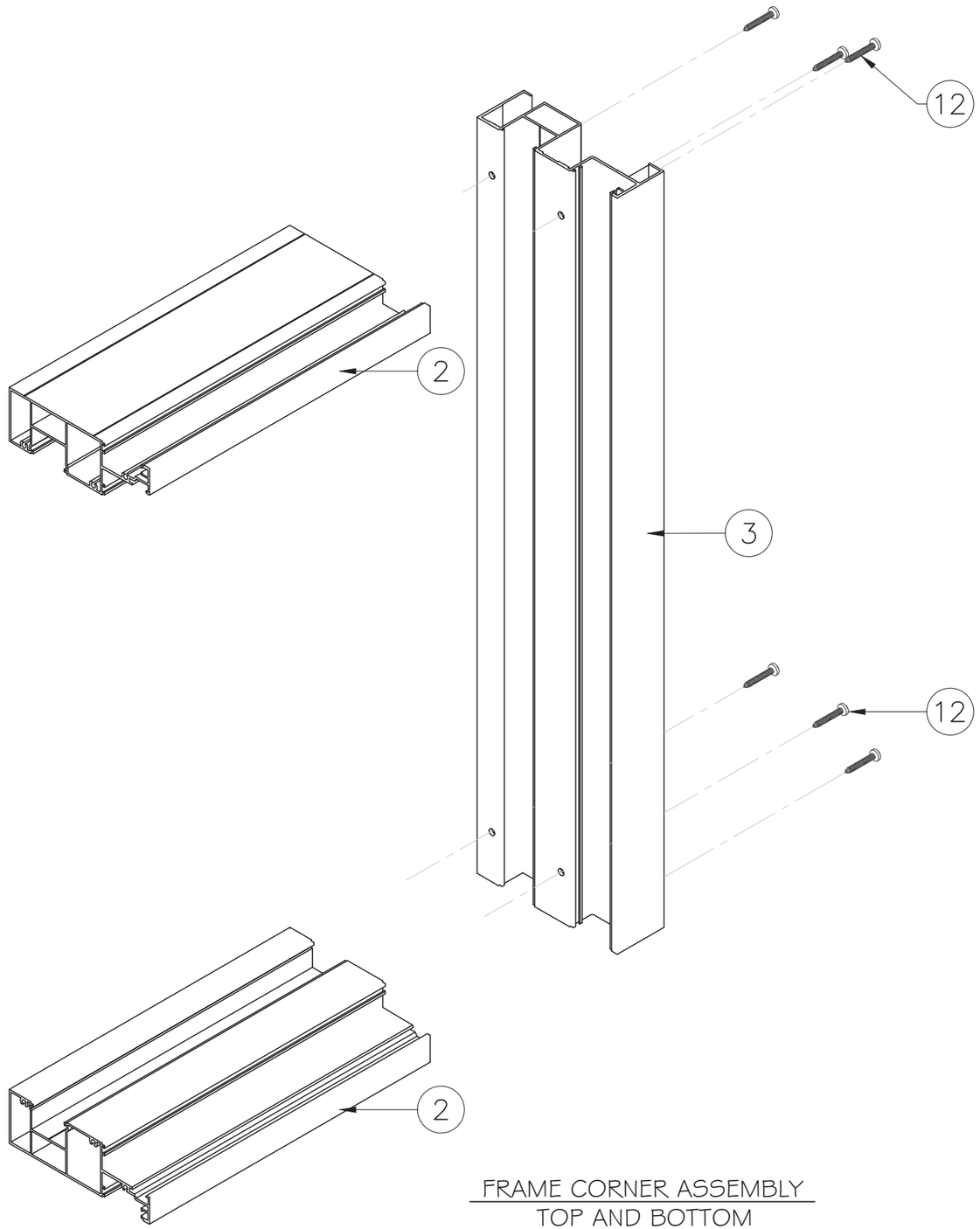

FRAME CORNER ASSEMBLY
TOP AND BOTTOM

FLORIDA APPROVAL:

FL47433

YIPING WANG, P.E.
FLORIDA REGISTRATION
CL # 55983
C.A.N. 0000077

YIPING WANG
No 55983
STATE OF FLORIDA
PROFESSIONAL ENGINEER

April 11th, 2025

MCY ENGINEERING, INC.
GLAZING CONSULTANTS
12781 MIRAMAR PKWY.STE.301
MIRAMAR, FL 33027
P: 305.271.0117
www.MCYEngineering.com mcy@mcyengineering.com

YY150 ALUMINUM FIXED WINDOW SYSTEM- NON IMPACT

ELITE DOORS AND WINDOWS, INC.
4780 CORONA AVENUE, VERNON, CALIFORNIA 90058
TEL.310 487 3334
EMAIL: Gino@elitedoorswindows.com

Rev. No.	Date	Drawn By	Description
R0	04.07.2025	James	NEW APPLICATION

Drawn Date 04.07.2025

SCALE AS SHOWN

DRAWING NO. AD25-13

ASSEMBLY

Sheet No. 06 OF 06